UNIVERSITY OF CAMBRIDGE INTERNATIONAL EXAMINATIONS
General Certificate of Education
Advanced Subsidiary Level and Advanced Level

PHYSICS

Paper 2

9702/02

May/June 2005

1 hour

Candidates answer on the Question Paper.
No Additional Materials are required.

Candidate Name

Centre Number

Candidate Number

READ THESE INSTRUCTIONS FIRST

Write your Centre number, candidate number and name on all the work you hand in.
Write in dark blue or black pen in the spaces provided on the Question Paper.
You may use a soft pencil for any diagrams, graphs or rough working.
Do not use staples, paper clips, highlighters, glue or correction fluid.

Answer **all** questions.
The number of marks is given in brackets [ ] at the end of each question or part question.
You may lose marks if you do not show your working or if you do not use appropriate units.

DO NOT WRITE IN THE BARCODE.

DO NOT WRITE IN THE GREY AREAS BETWEEN THE PAGES.

For Examiner's Use	
1	
2	
3	
4	
5	
6	
7	
8	
Total	

This document consists of **16** printed pages.

© UCLES 2005

Data

speed of light in free space,	$c = 3.00 \times 10^{8}\ \text{m s}^{-1}$
permeability of free space,	$\mu_0 = 4\pi \times 10^{-7}\ \text{H m}^{-1}$
permittivity of free space,	$\epsilon_0 = 8.85 \times 10^{-12}\ \text{F m}^{-1}$
elementary charge,	$e = 1.60 \times 10^{-19}\ \text{C}$
the Planck constant,	$h = 6.63 \times 10^{-34}\ \text{J s}$
unified atomic mass constant,	$u = 1.66 \times 10^{-27}\ \text{kg}$
rest mass of electron,	$m_e = 9.11 \times 10^{-31}\ \text{kg}$
rest mass of proton,	$m_p = 1.67 \times 10^{-27}\ \text{kg}$
molar gas constant,	$R = 8.31\ \text{J K}^{-1}\ \text{mol}^{-1}$
the Avogadro constant,	$N_A = 6.02 \times 10^{23}\ \text{mol}^{-1}$
the Boltzmann constant,	$k = 1.38 \times 10^{-23}\ \text{J K}^{-1}$
gravitational constant,	$G = 6.67 \times 10^{-11}\ \text{N m}^2\ \text{kg}^{-2}$
acceleration of free fall,	$g = 9.81\ \text{m s}^{-2}$

© UCLES 2005

Formulae

uniformly accelerated motion, $s = ut + \frac{1}{2}at^2$
$v^2 = u^2 + 2as$

work done on/by a gas, $W = p\Delta V$

gravitational potential, $\phi = -\frac{Gm}{r}$

simple harmonic motion, $a = -\omega^2 x$

velocity of particle in s.h.m., $v = v_0 \cos \omega t$
$v = \pm \omega \sqrt{(x_0^2 - x^2)}$

resistors in series, $R = R_1 + R_2 + \ldots$

resistors in parallel, $1/R = 1/R_1 + 1/R_2 + \ldots$

electric potential, $V = \frac{Q}{4\pi\epsilon_0 r}$

capacitors in series, $1/C = 1/C_1 + 1/C_2 + \ldots$

capacitors in parallel, $C = C_1 + C_2 + \ldots$

energy of charged capacitor, $W = \frac{1}{2}QV$

alternating current/voltage, $x = x_0 \sin \omega t$

hydrostatic pressure, $p = \rho g h$

pressure of an ideal gas, $p = \frac{1}{3}\frac{Nm}{V}\langle c^2 \rangle$

radioactive decay, $x = x_0 \exp(-\lambda t)$

decay constant, $\lambda = \frac{0.693}{t_{\frac{1}{2}}}$

critical density of matter in the Universe, $\rho_0 = \frac{3H_0^2}{8\pi G}$

equation of continuity, $Av =$ constant

Bernoulli equation (simplified), $p_1 + \frac{1}{2}\rho v_1^2 = p_2 + \frac{1}{2}\rho v_2^2$

Stokes' law, $F = Ar\eta v$

Reynolds' number, $R_e = \frac{\rho v r}{\eta}$

drag force in turbulent flow, $F = Br^2\rho v^2$

© UCLES 2005

Answer **all** the questions in the spaces provided.

1 Make estimates of the following quantities.

(a) the speed of sound in air

speed = ... [1]

(b) the density of air at room temperature and pressure

density = ... [1]

(c) the mass of a protractor

mass = ... [1]

(d) the volume, in cm^3, of the head of an adult person

volume = ... cm^3 [1]

© UCLES 2005

2 The Brownian motion of smoke particles in air may be observed using the apparatus shown in Fig. 2.1.

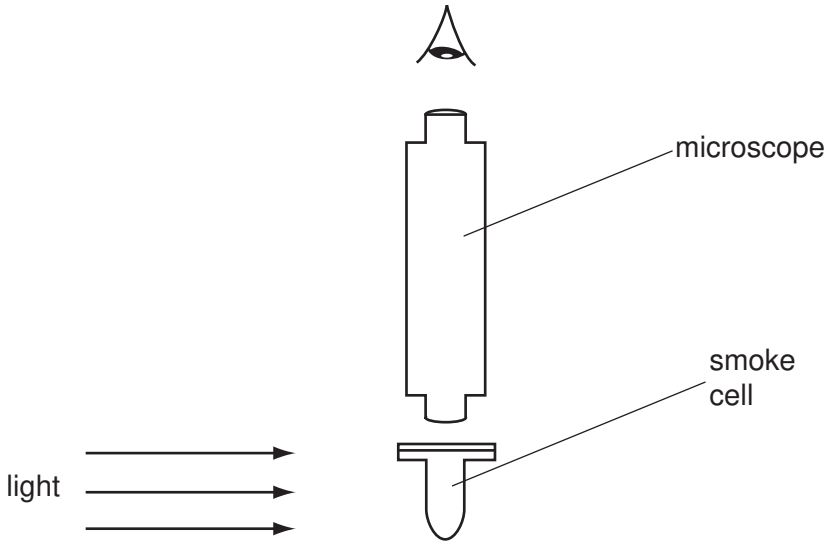

Fig. 2.1

(a) Describe what is seen when viewing a smoke particle through the microscope.

.....

.....

.....[2]

(b) Suggest and explain what difference, if any, would be observed in the movement of smoke particles when larger smoke particles than those observed in **(a)** are viewed through the microscope.

.....

.....

.....[2]

© UCLES 2005

[Turn over

3 A bullet of mass 2.0 g is fired horizontally into a block of wood of mass 600 g. The block is suspended from strings so that it is free to move in a vertical plane.
The bullet buries itself in the block. The block and bullet rise together through a vertical distance of 8.6 cm, as shown in Fig. 3.1.

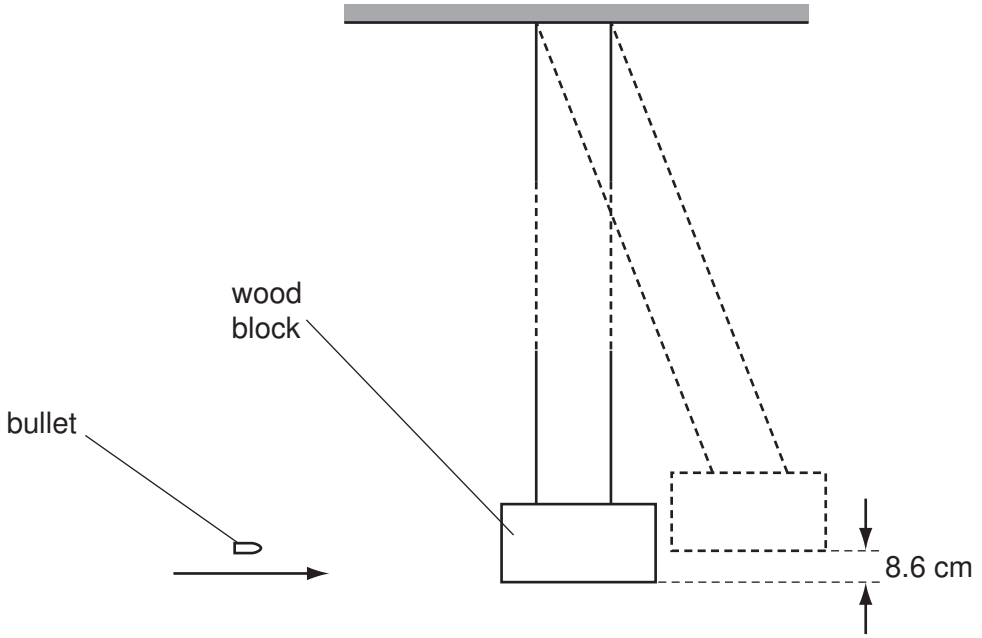

Fig. 3.1

(a) (i) Calculate the change in gravitational potential energy of the block and bullet.

change = ... J [2]

(ii) Show that the initial speed of the block and the bullet, after they began to move off together, was 1.3 m s^{-1}.

[1]

© UCLES 2005

(b) Using the information in **(a)(ii)** and the principle of conservation of momentum, determine the speed of the bullet before the impact with the block.

speed = ... $m\,s^{-1}$ [2]

(c) **(i)** Calculate the kinetic energy of the bullet just before impact.

kinetic energy = ... J [2]

(ii) State and explain what can be deduced from your answers to **(c)(i)** and **(a)(i)** about the type of collision between the bullet and the block.

.....

.....

.....[2]

© UCLES 2005

[Turn over

4 A glass fibre of length 0.24 m and area of cross-section 7.9×10^{-7} m^2 is tested until it breaks. The variation with load F of the extension x of the fibre is shown in Fig. 4.1.

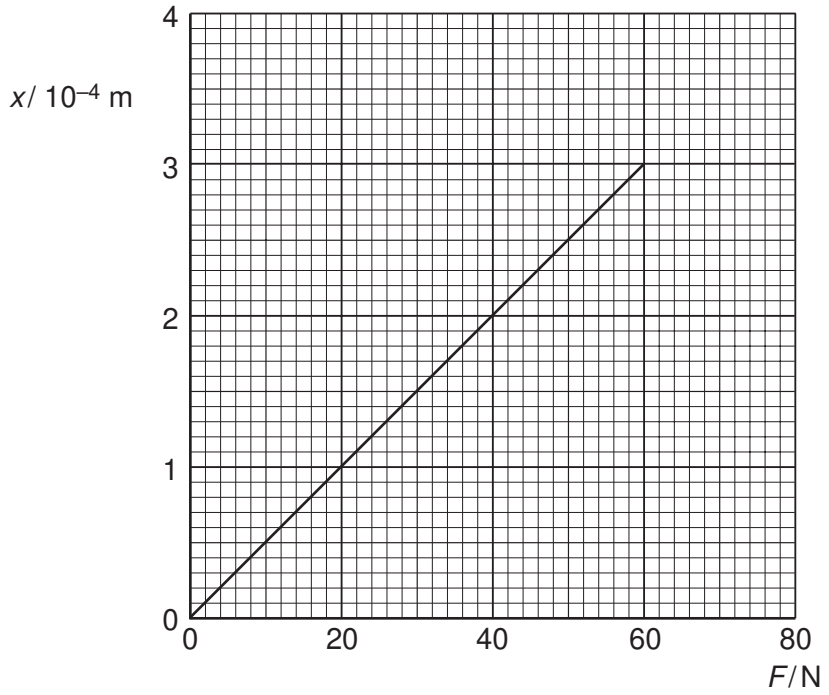

Fig. 4.1

(a) State whether glass is ductile, brittle or polymeric.

.....[1]

(b) Use Fig. 4.1 to determine, for this sample of glass,

(i) the ultimate tensile stress,

ultimate tensile stress = ... Pa [2]

© UCLES 2005

(ii) the Young modulus,

Young modulus = ... Pa [3]

(iii) the maximum strain energy stored in the fibre before it breaks.

maximum strain energy = ... J [2]

(c) A hard ball and a soft ball, with equal masses and volumes, are thrown at a glass window. The balls hit the window at the same speed. Suggest why the hard ball is more likely than the soft ball to break the glass window.

.....

.....

.....

.....[3]

© UCLES 2005

5 **(a)** Explain what is meant by the *diffraction* of a wave.

.....

.....

.....[2]

(b) Light of wavelength 590 nm is incident normally on a diffraction grating having 750 lines per millimetre.
The diffraction grating formula may be expressed in the form

$$d \sin\theta = n\lambda.$$

(i) Calculate the value of d, in metres, for this grating.

d = ... m [2]

(ii) Determine the maximum value of n for the light incident normally on the grating.

maximum value of n = ... [2]

© UCLES 2005

(iii) Fig. 5.1 shows incident light that is not normal to the grating.

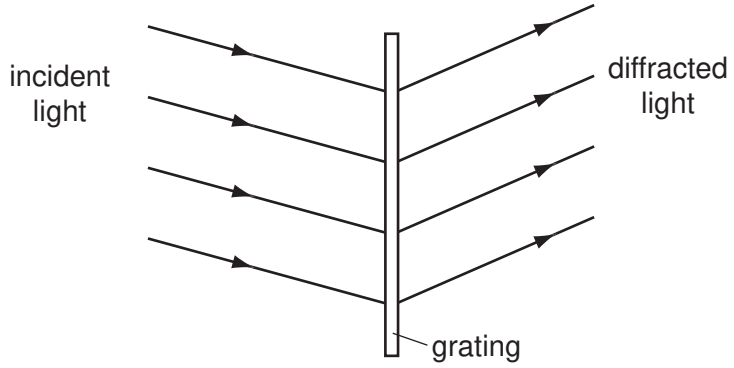

Fig. 5.1

Suggest why the diffraction grating formula, $d\sin\theta = n\lambda$, should **not** be used in this situation.

.....

.....[1]

(c) Light of wavelengths 590 nm and 595 nm is now incident normally on the grating.
Two lines are observed in the first order spectrum and two lines are observed in the second order spectrum, corresponding to the two wavelengths.
State two differences between the first order spectrum and the second order spectrum.

1. .....

.....

2. .....

.....[2]

© UCLES 2005

[Turn over

6 Two parallel metal plates P and Q are situated 8.0 cm apart in air, as shown in Fig. 6.1.

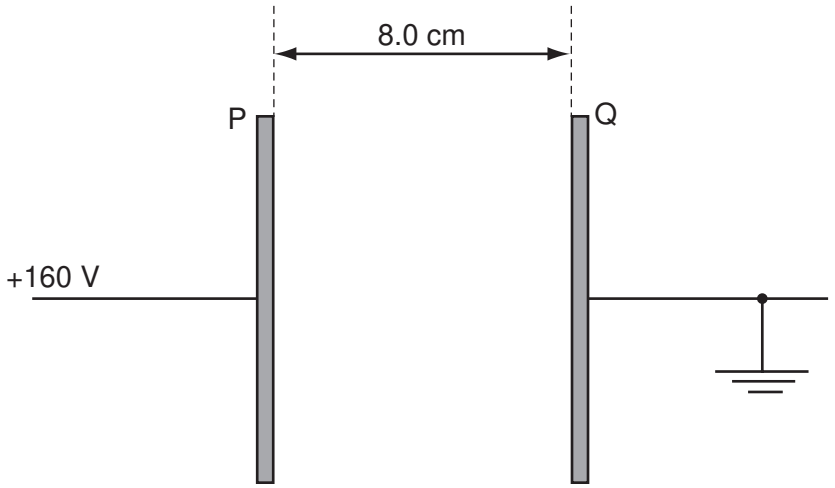

Fig. 6.1

Plate Q is earthed and plate P is maintained at a potential of +160 V.

(a) (i) On Fig. 6.1, draw lines to represent the electric field in the region between the plates. [2]

(ii) Show that the magnitude of the electric field between the plates is 2.0×10^3 V m^{-1}.

[1]

© UCLES 2005

(b) A dust particle is suspended in the air between the plates. The particle has charges of $+1.2\times10^{-15}$ C and -1.2×10^{-15} C near its ends. The charges may be considered to be point charges separated by a distance of 2.5 mm, as shown in Fig. 6.2.

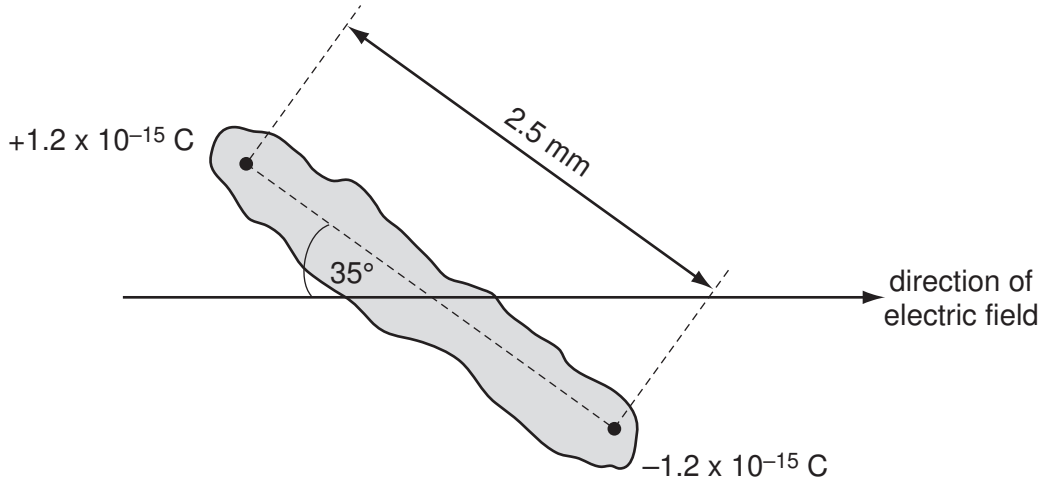

Fig. 6.2

The particle makes an angle of 35° with the direction of the electric field.

(i) On Fig. 6.2, draw arrows to show the direction of the force on each charge due to the electric field. [1]

(ii) Calculate the magnitude of the force on each charge due to the electric field.

force = ... N [2]

(iii) Determine the magnitude of the couple acting on the particle.

couple = ... N m [2]

(iv) Suggest the subsequent motion of the particle in the electric field.

.....

.....

.....[2]

7 **(a)** Define the *resistance* of a resistor.

.....

.....[1]

(b) In the circuit of Fig. 7.1, the battery has an e.m.f. of 3.00 V and an internal resistance *r*. R is a variable resistor. The resistance of the ammeter is negligible and the voltmeter has an infinite resistance.

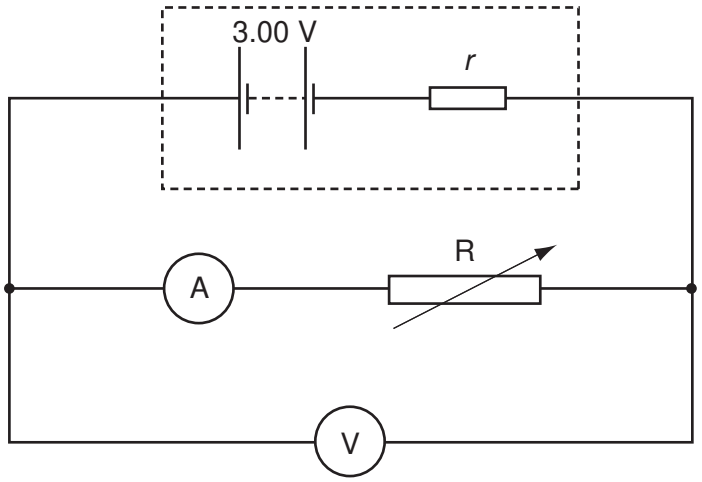

Fig. 7.1

The resistance of R is varied. Fig. 7.2 shows the variation of the power *P* dissipated in R with the potential difference *V* across R.

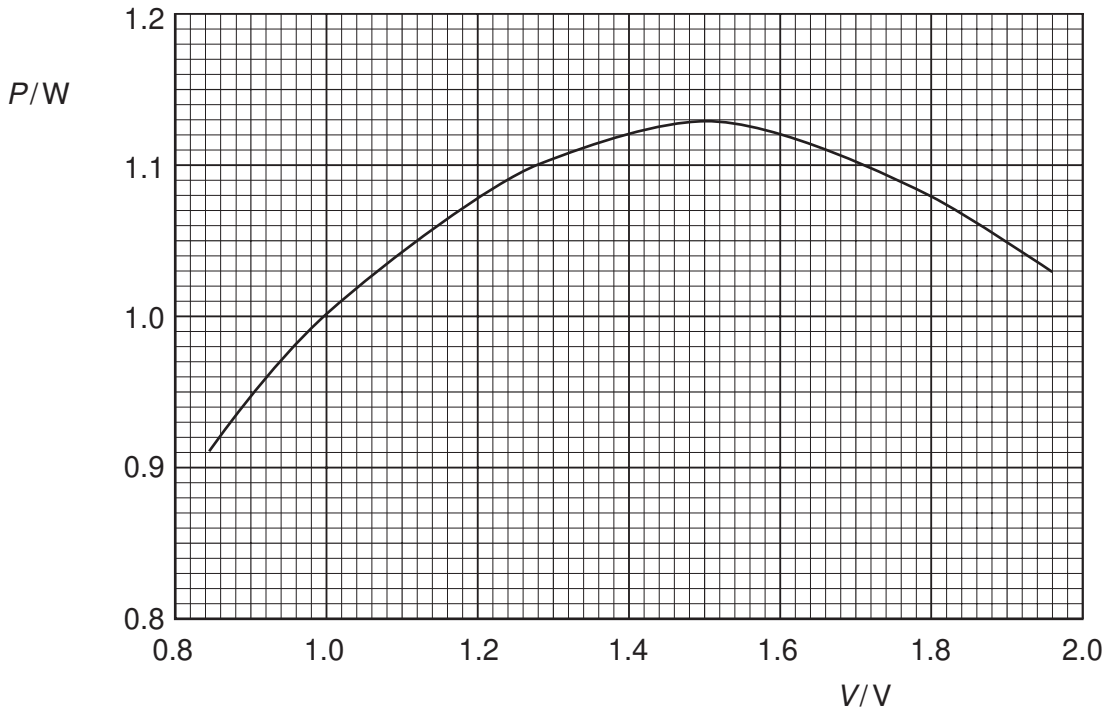

Fig. 7.2

(i) Use Fig. 7.2 to determine

1. the maximum power dissipation in R,

maximum power = ... W

2. the potential difference across R when the maximum power is dissipated.

potential difference = ... V
[1]

(ii) Hence calculate the resistance of R when the maximum power is dissipated.

resistance = ... Ω [2]

(iii) Use your answers in **(i)** and **(ii)** to determine the internal resistance *r* of the battery.

r = ... Ω [3]

(c) By reference to Fig. 7.2, it can be seen that there are two values of potential difference *V* for which the power dissipation is 1.05 W.
State, with a reason, which value of *V* will result in less power being dissipated in the internal resistance.

.....

.....

.....

.....[3]

8 Fig. 8.1 shows the position of Neptunium-231 ($^{231}_{93}$Np) on a diagram in which nucleon number (mass number) *A* is plotted against proton number (atomic number) *Z*.

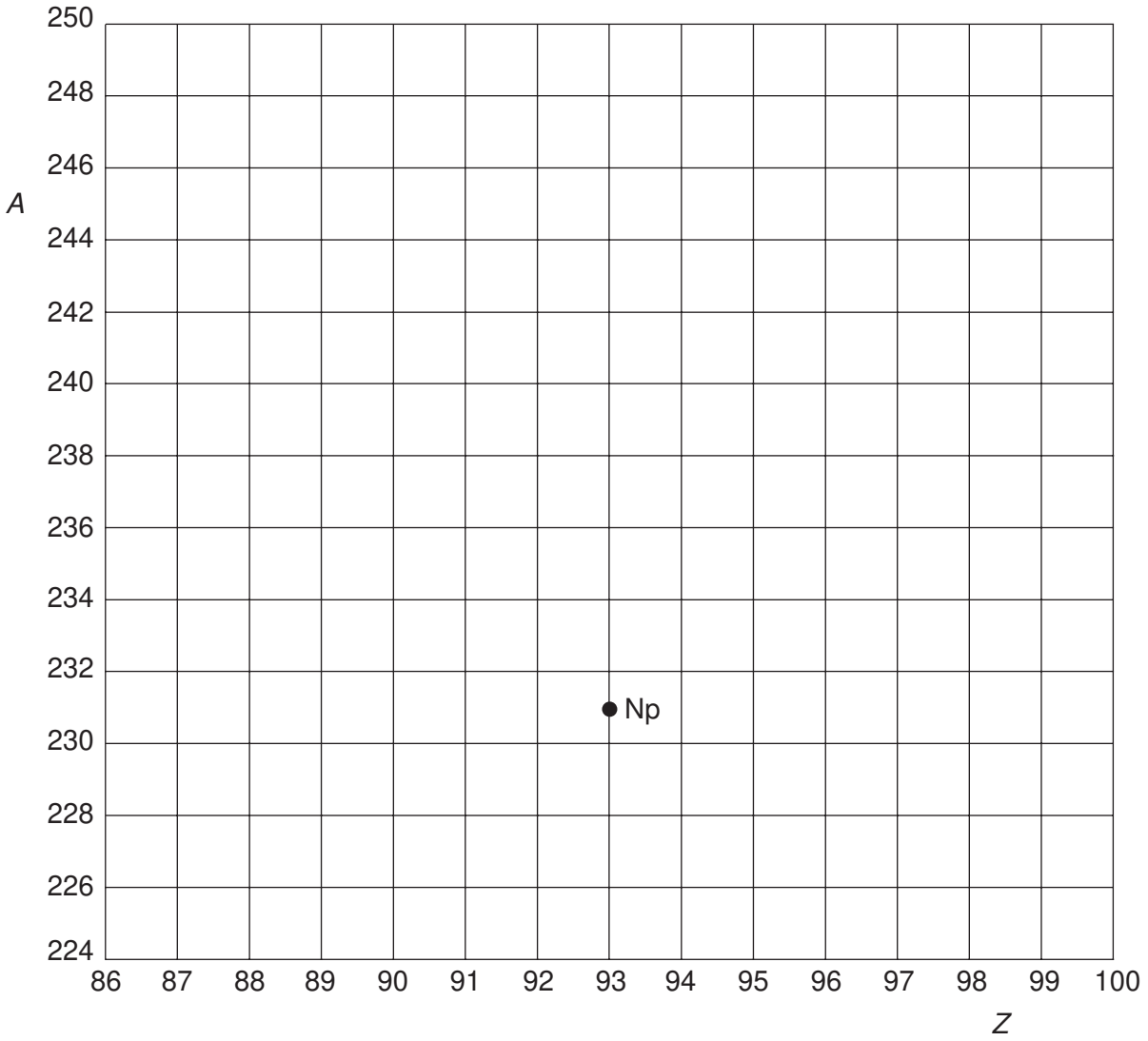

Fig. 8.1

(a) Neptunium-231 decays by the emission of an α-particle to form protactinium.
On Fig. 8.1, mark with the symbol Pa the position of the isotope of protactinium produced in this decay. [1]

(b) Plutonium-243 ($^{243}_{94}$Pu) decays by the emission of a β-particle (an electron).
On Fig. 8.1, show this decay by labelling the position of Plutonium-243 as Pu and the position of the daughter product as D. [2]

Permission to reproduce items where third-party owned material protected by copyright is included has been sought and cleared where possible. Every reasonable effort has been made by the publisher (UCLES) to trace copyright holders, but if any items requiring clearance have unwittingly been included, the publisher will be pleased to make amends at the earliest possible opportunity.

University of Cambridge International Examinations is part of the University of Cambridge Local Examinations Syndicate (UCLES), which is itself a department of the University of Cambridge.